DEPARTMENT OF HEALTH AND MENTAL HYGIENE
Caroline County Health Department
P.O. Box 10, Denton, MD 21629
410-479-3666

PERMIT # N01047
ON-SITE SEWAGE DISPOSAL PERMIT for: Reb (Property Owner) — Map 58, Block 7, Parcel 81, Lot ____

Issued to: James Mowbray (Contractor) — license number 134-M

A. Septic tank capacity: minimum _____ gallons, 2-compartment with integral rubber gaskets; unless otherwise specified elevation established to allow gravity flow of wastewater to distribution box or pump chamber; seal tank seams with non-shrink grout to prohibit groundwater intrusion. Concrete risers over the inlet and outlet are recommended. Set Tank on undisturbed or tamped soil.

B. TILE FIELD: minimum total length of tile _____ ft; width of each trench _____ ft; depth of trench 6 inches below the tile line invert or, if noted, _____ inches below the tile line invert; tile invert depth at the distribution box _____ inches below the ground surface, however, if this will result in less than 6 inches of soil backfill over any part of the tile field then the contractor shall contact the Health Department prior to construction to determine if the height of the tile invert should be adjusted, tile grade 0%; if checked, _____ provide a vent in the line connecting the trenches.

C. DISTANCE OF SEPTIC SYSTEM AND SEWAGE RESERVED AREA TO WATER SUPPLY WELL: A minimum of 50 ft.

D. OTHER SPECIFICATIONS (See Page 3): Specs approved as submitted by Accurate Environmental Consultants LLC

Issued by: [signature] (Environmental Sanitarian) Date 10-5-00

This permit expires 10-5-01. This is for an interim sewage disposal system. The applicant or any future owner shall disconnect this system and connect to the community sewerage system when available. No part of this system may be covered or used until inspected and approved by the Caroline County Health Department. The licensed contractor must contact the Caroline County Health Department by 9:00 a.m. on the date of completion of construction for the final inspection. Calls received after 9:00 a.m. may be scheduled the next working day. This permit cannot be transferred.

SEEPAGE TRENCH CROSS-SECTION

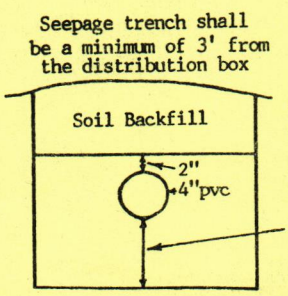

TYPICAL BREATHER (VENT)

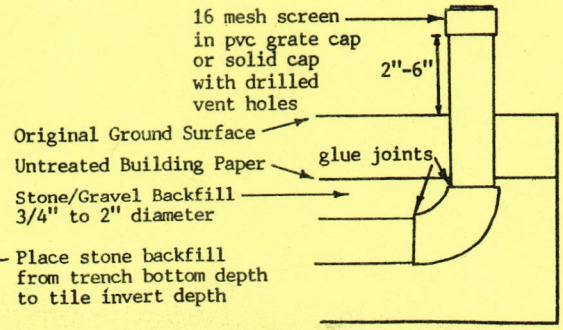

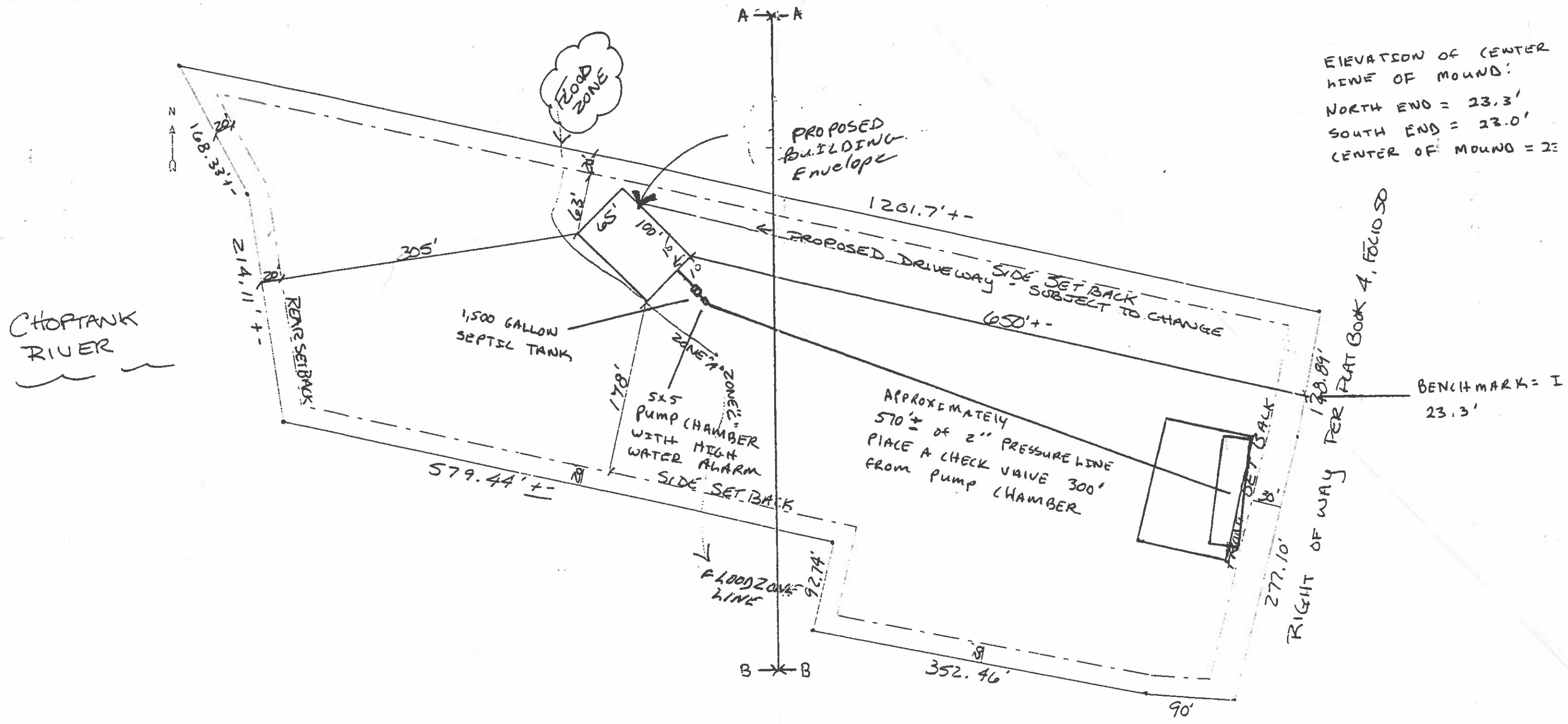

SCALE 1" = 100'

REB PROPERTY
FRAZIER POINT
MAP 58 BLK 7 PCL 81

CAROLINE COUNTY HEALTH DEPARTMENT
Division of Environmental Health

SCP # N 01047 **OWNER:** Reb **CONTRACTOR:** Mowbray

Map 58, **Block** 7, **Parcel** 81, **Lot** ____

REQUIRED INSPECTIONS:

A. Materials Approved (tank, pump, and mound location): _____ Sanitarian _____ Date

B. Septic Tank and Pump Installation: ..... GK Sanitarian 5-24-01 Date

C. Sand Fill and Stone Bed Installation: ..... GK Sanitarian 11-27-01 Date

D. Pipe Network Installation/Pump Test: ..... GK Sanitarian 11-27-00 Date

No on 11-27-00
completed 5-24-01

E. Final Inspection/Stabilization: ..... GK Sanitarian 5-24-01 Date

FORMS-MIS(MOUND INSPECTION SHEET)

11-27-00 Sand partially in place, stone + pipe in place. Sand is not out to edge of mound. Grass has not been disturbed to full edges of mound

5-24-01 On corner of ~~bed~~ mound, during pump test - some surface discharge at turn up.
Grass/vegetation is sparse - extremely dry - must reseed by Aug 2001

8/28/01 entire mound covered with weeds - 4'-5' high - called Mrs Reb on 10/24/01 - the mound must be stabilized with rye over winter - she will contact Mowbry

17. The owner shall not make any changes or authorize the contractor to make any changes without concurrence of the local Health Department.

18. Additional Notes/ Specifications.

a. Second check valve required in the force main 300 feet from the pump chamber.

b.

c.

d.

Accurate Environmental Consulting, LLC
9317 High Banks Dr., Easton, MD 21601
Phone: (410) 819-3166
Fax: (410) 763-7200

MOUND SPECIFICATIONS SUMMARY & TABLE OF CONTENTS

OWNER: Mary Reb

ROAD: Frazier Point

MAP: 58 BLOCK: 7 PARCEL: 81 LOT: BLOCK: SECTION:

DESIGN RATE: 600 gallons/square foot/day WATER TABLE: -24 in.

Table of Contents

Specifications Summary

A. Mound & Bed
1. Absorption Bed Width = ... 6 ft. 0 in.
2. Absorption Bed Length = ... 83 ft. 4 in.
3. Total Mound Width = ... 29 ft. 0 in.
4. Total Mound Length = ... 110 ft. 0 in.
5. Side Slope Setback = ... 13 ft. 0 in.
6. Upslope Setback = ... 11 ft. 6 in.
7. Downslope Setback = ... 11 ft. 6 in.
8. Upslope Sand Fill depth = ... 24 in.
9. Downslope Sand Fill Depth = ... 24 in.

B. Distribution Network
1. Diameter of Force Main = ... 3 in.
2. Total length of Force Main = ... 570 ft.
3. Length of Manifold = ... 3 ft.
4. Manifold Diameter = ... 3 in.
5. Center Manifold
6. Length of Laterals From Manifold = ... 41 ft. 1 1/2 in.

7. Number of Laterals =..... 4
8. Space Between Laterals = ... 3 ft. 0 in.
9. Lateral Diameter = ... 1.25 in.
10. Perforation Diameter = ... 5/16 in.
11. Perforation Spacing = ... 42 in.
12. Number of Perforations Per Lateral = 11
13. Space Between First Perforation & Manifold = .. 31 1/2 in.

SCP N01047.
at 20786 Frazier Pt Lane

C. Pump

1. Minimum Flow or Discharge Rate For System = 71.72 g.p.m.
2. Total Dynamic Head (TDH) = ... 40 ft.
3. Dose = ... 100 gallons

As Built.

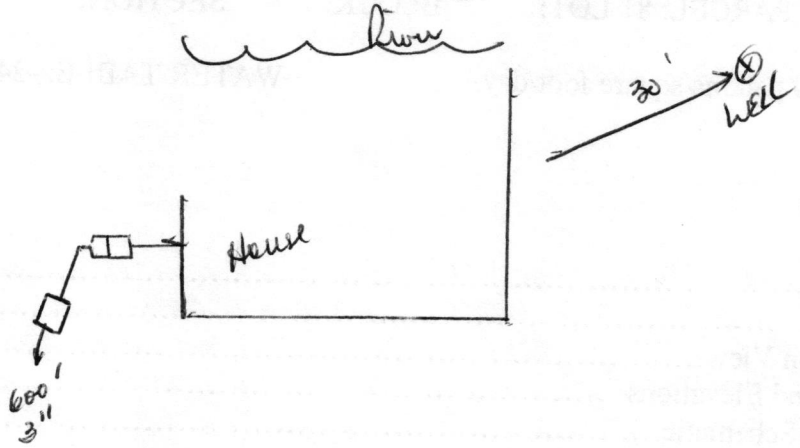

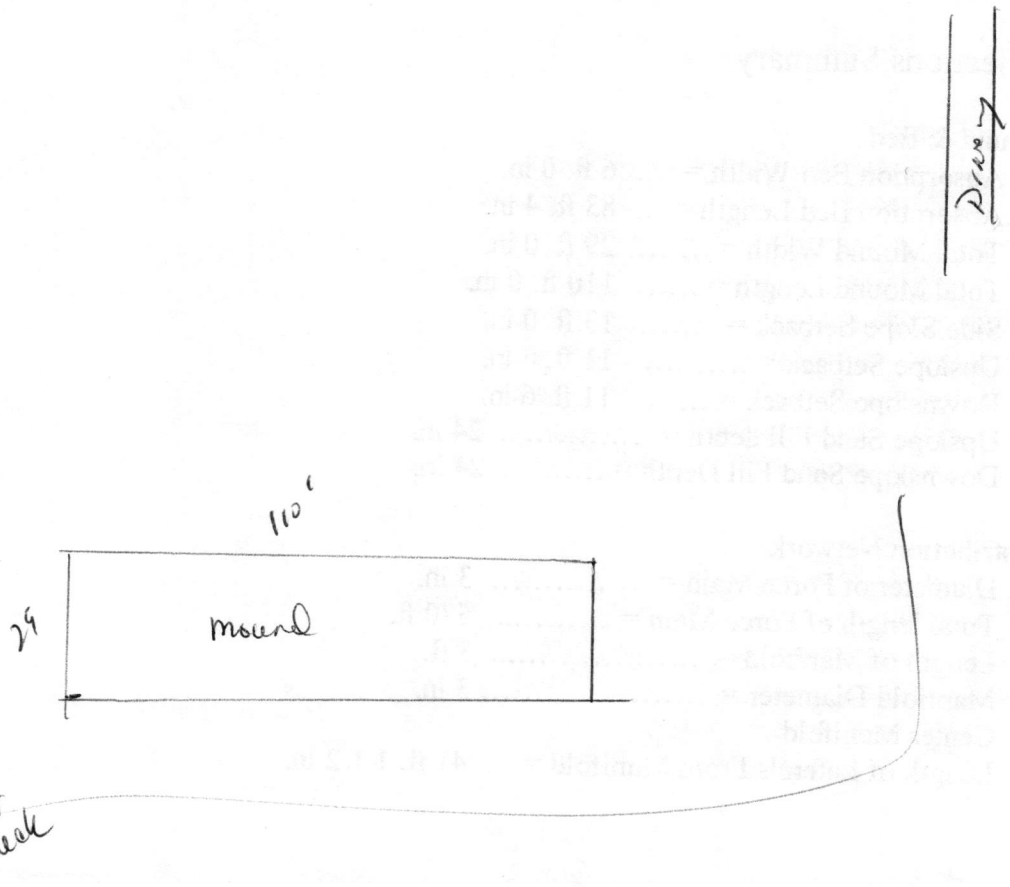

SAND MOUND PLAN VIEW

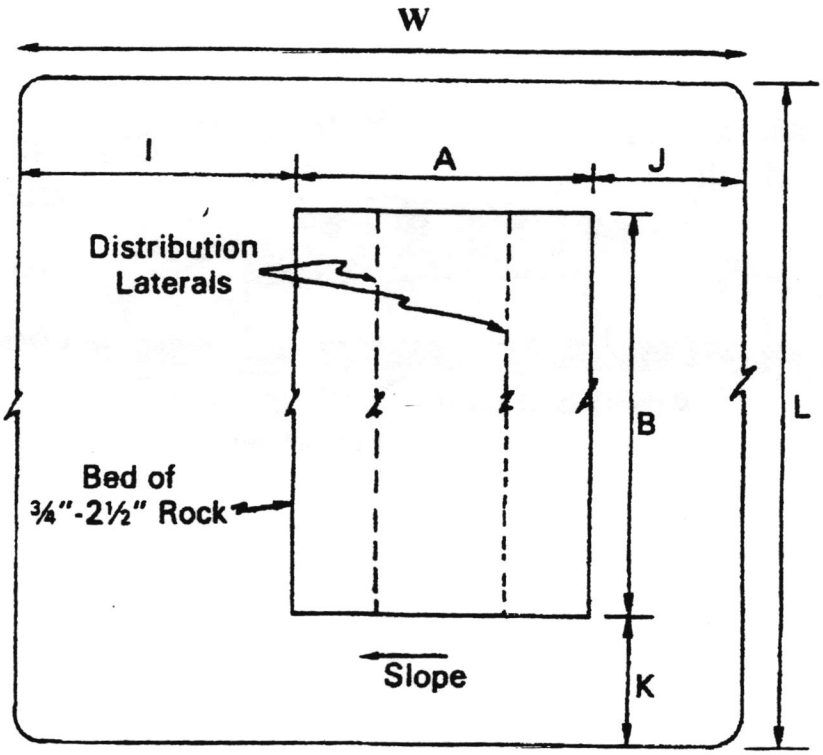

A = Bed Width = ...	6 ft. 0 in.
B = Bed Length = ...	83 ft. 4 in.
K = Sideslope Setback = ...	13 ft. 0 in.
J = Upslope Setback = ...	11 ft. 6 in.
I = Downslope Setback = ...	11 ft. 6 in.
W = Total Width of Mound = ...	29 ft. 0 in.
L = Total Length of Mound = ...	110 ft. 0 in.

SAND MOUND CROSS-SECTION VIEW

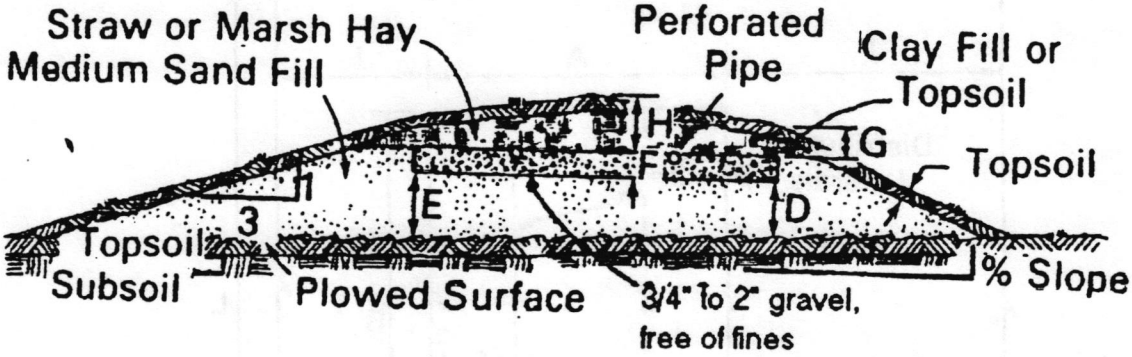

D = Upslope Sand Fill Depth = …… 24 in.

E = Downslope Sand Fill Depth = … 24 in.

F = Bed Depth = …… 10 in.

G = Cap & Topsoil at Bed Edges = 12 in.

H = Cap & Topsoil at Bed Center = 18 in.

TANK, PUMP, & MOUND ELEVATIONS

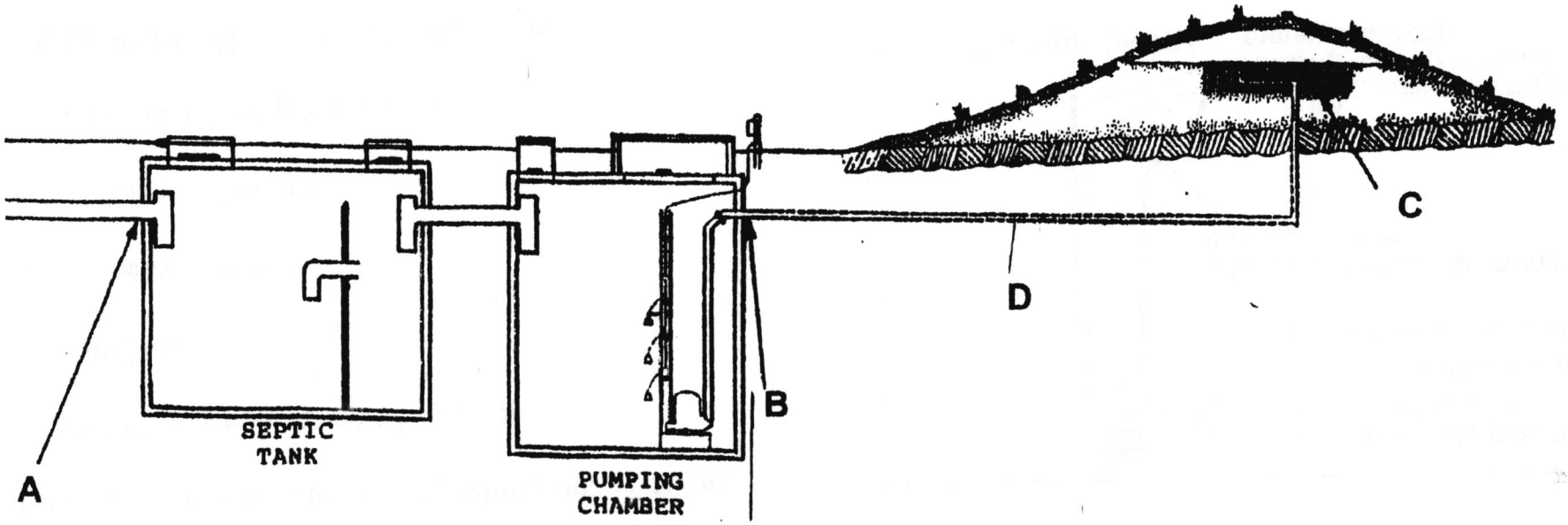

A = Septic Tank Inlet Invert Elevation = maximum 14 inches below existing grade, approximately ft. in.

B = Pumping Chamber Inlet & Outlet Invert Elevation = maximum 18 inches below existing grade, approximately ft. in.

C = Elevation of Top of Sand Under Bed (Or, in case of at-grade mound installations, the elevation of the ground level at the force main location) = 25 ft. 0 in.

D = Force Main, which is sloped to drain back into the pump chamber, approximately 0.4 %, unless designed to remain flooded.

DISTRIBUTION SYSTEM SCHEMATIC

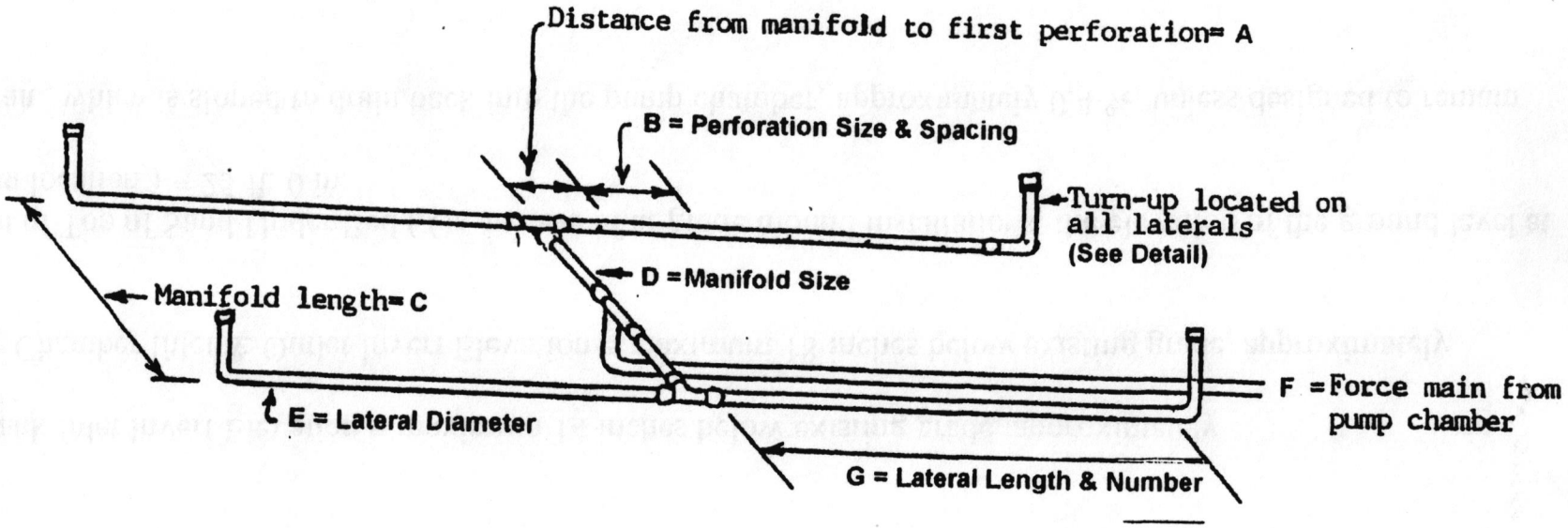

A = Distance from manifold to first perforation: 31 1/2 in.

B = Use 5/16 " perforations on 42 " centers.

C = Manifold length: 3 '.

D = 3 " diameter manifold.

E = 1.25 " diameter laterals.

F = 3 " force main from pump chamber.

G = Lateral length: 41 ft. 1 1/2 in. Use 4 laterals.

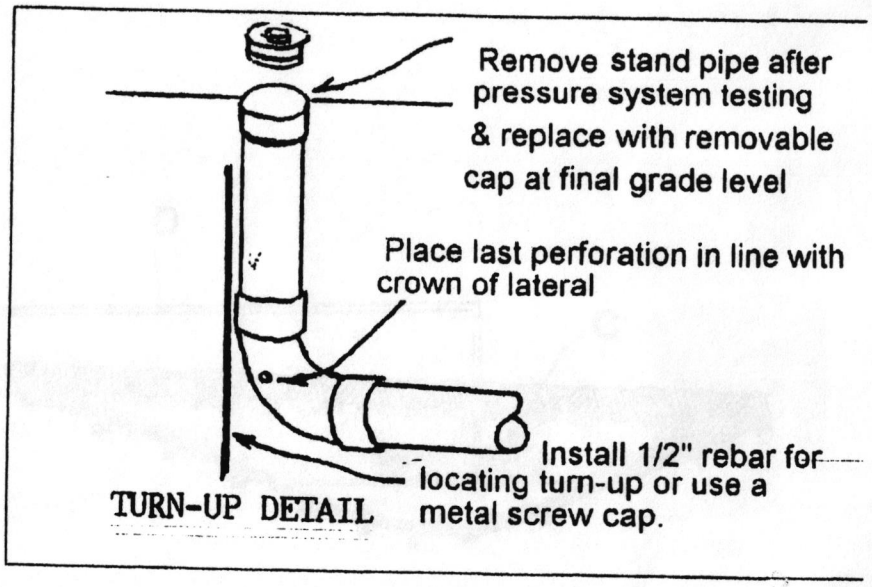

TYPICAL 5' X 5' X 5' PUMP CHAMBER

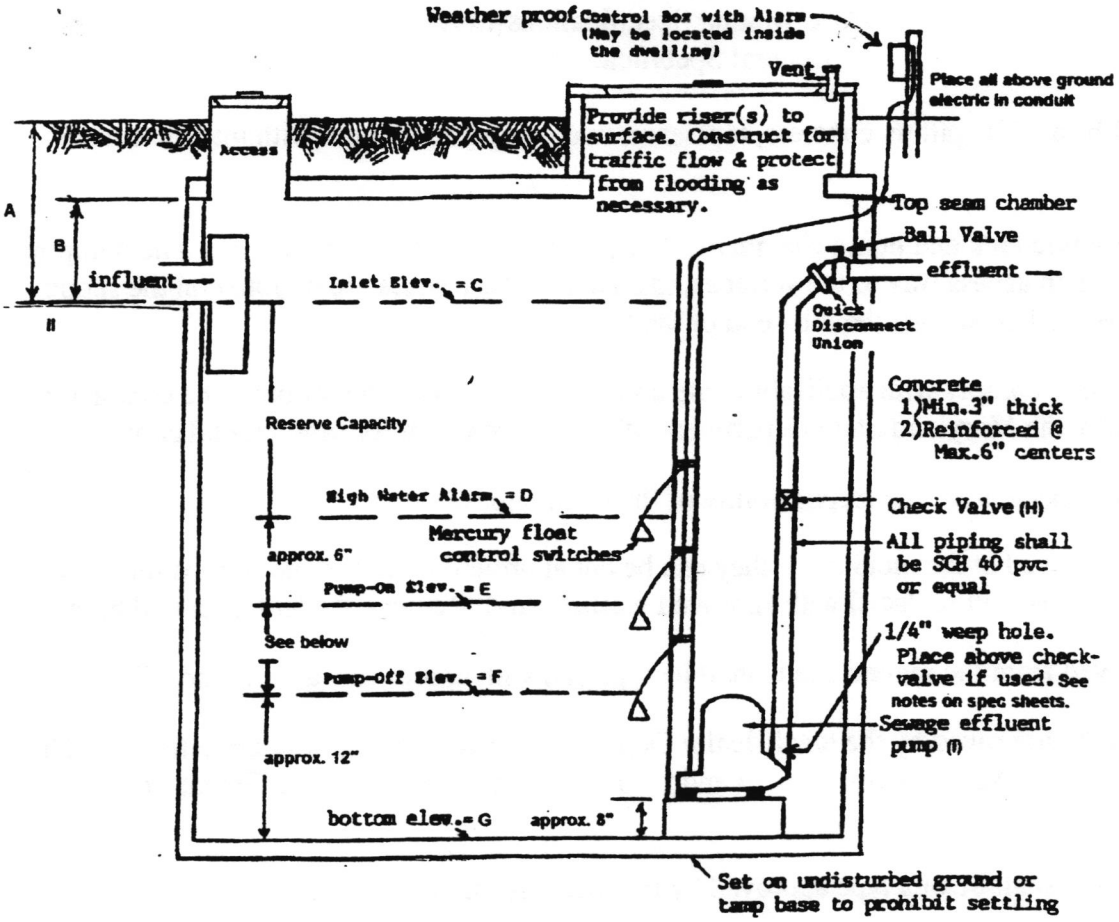

A = See page 4

B = Inlet set as high as possible through wall of chamber.

C = Inlet Elevation: approximately 19 ft. 6 in.

D = High Water Alarm Elevation : approximately 17 ft. 6 1/2 in.

E = Pump On Elevation : approximately 17 ft. 1/2 in.

F = Pump Off Elavation: approximately 16 ft. 6 in.

G = Bottom Elevation: approximately 15 ft. 6 in.

H = Check Valve: Required

I = Sewage Effluent Pump to Provide 71.72 GPM @ 40 ft. TDH

AEC Mound Specifications

General Specifications

1. Septic tank shall be a 1500 gallon, concrete, top-seam, two-compartment tank with integral rubber gaskets.

2. All seams of the septic tank and pump chamber shall be sealed with a non-shrink grout. The pumping chamber shall have an access way to the surface and a cover. These risers are optional on the septic tank but recommended on at least the inlet end of the tank.

3. All construction shall comply with applicable state and county laws and regulations. The contractor shall be certified by the Maryland State Department of the Environment for sand mound construction.

4. Sediment control measures are the responsibility of the contractor.

5. Where trees are removed at the mound site they can be cut at ground level and the stumps left in place or removed with all lost soil replaced with approved washed sand. Remove the leaf litter and humus.

6. If topsoil is removed from the mound site it shall be replaced with approved washed sand fill.

7. The sand fill shall be approved by the local Health Department prior to transportation to the site. The sand must have an effective size between 0.25 and 0.50 mm with a uniformity coefficient of 3.5 or less.

8. The geotextile fabric shall be of a type approved by the local Health department.

9. The bed aggregate shall be washed, free of fines, 3/4" to 2" in diameter.

10. The cap shall be a soil that is free of coarse fragments, preferably a clay loam, silt loam, or loam.

11. The bed and tank locations must provide the specified horizontal design distance to the manifold with a minor variance of 5 foot allowed. Other distances may require recalculation of the specifications.

12. All piping shall be schedule 40 pvc with solvent welded fittings. The force main shall slope to the pump chamber to permit draining after each pump cycle unless otherwise specified below.

13. The contractor is responsible for contacting Miss Utility and for damages to utilities due to system construction.

14. The owner is responsible for obtaining a sediment control plan. Contact the local Soil Conservation Service.

15. Provide an audible and visual alarm in a NEMA 3R enclosure. All electrical work shall be in accordance with the National Electric Code and/or any other local codes. All above ground electric service shall be in conduit that is secured to the extent possible from mowers and trimmers.

16. Permanent seeding over the mound, or landscaping projects, shall take place within 15 working days after final grades are established. Contact the local Soil Conservation Service for recommendations. Re-establish unstabilized areas after six months.

HD calc.

DESIGN FLOW =	600	GPD	MOUND WIDTH =	29.9	FT. + .9
DESIGN INFILTRATION RATE	1.2	GPD/SQ.FT.	MOUND LENGTH =	109.4	FT. ✓ .6
ABSORPTION AREA =	500.0	SQ. FT.			
BED LENGTH (B) =	83.4	FT.			
BED WIDTH (A)=	6	FT.			
DEPTH TO WATER TABLE (Z) =	-24	IN.	SLOPE =	12	%
UPSLOPE SAND FILL DEPTH (D) =	24	IN.			
DOWNSLOPE SAND FILL DEPTH (E) =	24	IN.			
CAP AND TOPSOIL DEPTH AT BED CENTER (H) =	18	IN.			
CAP AND TOPSOIL DEPTH AT BED EDGE (G) =	12	IN.			
TOTAL BED DEPTH (F) =	10	IN.			
SIDESLOPE SETBACK (K) =	156.0	IN.			
UPSLOPE SETBACK (J) =	118.7	IN.	UPSLOPE CORRECTION FACTOR =	0.86	
DOWNSLOPE SETBACK (I) =	168.4	IN.	DOWNSLOPE CORRECTION FACTOR =	1.22	
TOTAL WIDTH OF MOUND (W)	29.9	FT.			
TOTAL LENGTH OF MOUND (L)	109.4	FT.			

CORRECTION FACTORS

SLOPE	DOWN-SLOPE	UP-SLOPE
0	1	1
2	1.06	0.94
4	1.14	0.89
6	1.22	0.86
8	1.32	0.8
10	1.44	0.77
12	1.57	0.73

(1)

DEPARTMENT OF HEALTH AND MENTAL HYGIENE
Caroline County Health Department

P.O. Box 10, Denton, MD 21629
410-479-3666

RECEIVED
OCT 2 2000
CAROLINE CO. HEALTH DEPT.

APPLICATION (page 2) FOR ON-SITE SEWAGE DISPOSAL PERMIT for: Reb (Property Owner) 58 (Map) 7 (Block) 81 (Parcel) ____ (Lot)

Directions:
In order for the Caroline County Health Department to issue an on-site sewage disposal permit for installation of an on-site sewage disposal system on your property, you shall submit specifications for the system to the Caroline County Health Department. Contact septic system installers who are licensed to construct septic systems in Caroline County. Use the following minimum specifications to help you get estimates and select a contractor. When you have selected a contractor then both of you must sign this form, and return it to our office. The permit is issued to the licensed contractor and cannot be transferred to another contractor unless authorized by this Department. **THIS FORM IS NOT A PERMIT**

Please return all page

Health Department Use Only: **Minimum Specifications.**

A. Septic tank capacity: minimum _____ gallons, 2-compartment with integral rubber gaskets; unless otherwise specified elevation established to allow gravity flow of wastewater to distribution box or pump chamber; seal tank seams with non-shrink grout to prohibit groundwater intrusion. Concrete risers over the inlet and outlet are recommended. Set Tank on undisturbed or tamped soil.

B. TILE FIELD: minimum total length of tile _____ ft; width of each trench _____ ft; depth of trench 6 inches below the tile line invert or, if noted, _____ inches below the tile line invert; tile invert depth at the distribution box _____ inches below the ground surface, however, if this will result in less than 6 inches of soil backfill over any part of the tile field then the contractor shall contact the Health Department prior to construction to determine if the height of the tile invert should be adjusted, tile grade 0%; if checked, _____ provide a vent in the line connecting the trenches.

C. DISTANCE OF SEPTIC SYSTEM AND SEWAGE RESERVED AREA TO WATER SUPPLY WELL: A minimum of 50 ft.

D. OTHER SPECIFICATIONS (See Page 3): Specs approved as submitted by Accurate Environmental Consulting LLC

I hereby apply for a permit to allow construction of an on-site sewage disposal system for the above referenced property and to be issued to the licensed sewage contractor identified below. Proposed specs or changes to the minimum specs shown on this page and on the sketch are shown below. I understand I have the right to have anyone prepare specs, e.g., contractor or an engineer. I also hereby transfer authority to the licensed sewage contractor to coordinate with the Health Department any necessary changes, to comply with the regulations, that are identified during construction. Proposed specs or changes;

X [signature] Signature of owner or authorized agent — Date 9/26/00

In accordance with the Caroline County Sanitary Construction Ordinance I hereby apply for a Sanitary Construction Permit for this property.

X JAMES E MOWBRAY (Contractor (print)) X [signature] (Contractor's Signature) 134/m (License Number) 9/28 00 (Date)

SEEPAGE TRENCH CROSS-SECTION

Seepage trench shall be a minimum of 3' from the distribution box

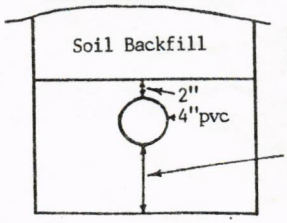

Place stone backfill from trench bottom depth to tile invert depth

TYPICAL BREATHER (VENT)

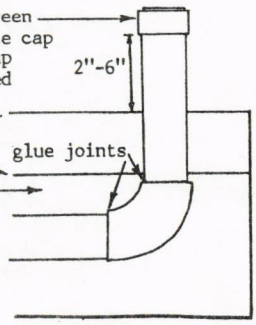

REV 7/92 White copy to Owner, Yellow copy to Health Department, Pink copy to Contractor

Caroline County Health Department

P.O. Box 10, Denton, Maryland 21629 • (410) 479-3666
Fax: (410) 479-0554 • TTD (410) 479-2159

PI #6179

APPLICATION FOR ON-SITE SEWAGE DISPOSAL PERMIT (Page 1)

Directions: Complete Sections A-N, attach appropriate fee, and mail to address above.

RECEIVED AUG 23 2000 CAROLINE CO. HEALTH DEPT.

410 673 7631

A) Owner's Name: Mary Reb

B) Day Phone: (410) 763-7807

C) Street or P.O. Box: 18 Laurel Street

D) City/State/ZIP: Easton, MD 21601

E) Property location: Frazier Point

Map 58 Block 7 Parcel 81 (Lot 4)

F) Is lot located within the limits of an incorporated town? Yes___ No___

G) Building: New ✓ (If new, attach copy of up-to-date perc approval letter or property status report)

Existing____ (Provide sketch of property lines and all existing buildings, including driveway)

H) Planned use of building: ✓ Residence (#bedrooms 4, #bathrooms 3, #people 4)

___ Commercial (Use &#people using facility ea 24 hrs: _____)

I) Water Supply: ___Existing ( )shallow well ( ) deep well ( ) municipal connection

✓ Proposed (✓) deep well ( ) municipal connection

J) Stake the proposed location of home and sewage reserved area on your property. NOTE: IF OWNER MAKES A CHANGE OF APPLICATION/PERMIT AFTER HEALTH DEPARTMENT VISITS THE SITE THAT WILL REQUIRE ANOTHER SITE VISIT, AN ADDITIONAL $50 FEE WILL BE DUE.

K) Provide a scaled drawing showing the location of your property lines, house (existing and/or proposed) as well as other existing and/or proposed construction such as driveways, electric service, pools, sheds, decks, etc. Only sewage systems shall be installed in the designated sewage reserved area.

L) I have reviewed the information on this application and hereby state that the information is correct. I understand that this permit will be issued on an interim basis only and that I will discontinue use of this interim system and connect to the community system when community sewerage is available. I also authorize the Caroline County Health Department to inspect my property for the purpose of providing or confirming minimum specifications for a sanitary construction permit and to determine compliance with COMAR 26.04.02 regarding on-site systems. I understand that I must return these specifications with my signature and my sewage contractor's signature within 3 months (90 days) from issuance of specifications or forfeit fees paid for this permit. I also understand that the sanitary construction permit will be issued to my sewage contractor.

M) Type (check one): ( ) Tank only $75 fee. ( ) Repair/Renovation $200 fee. (✓) New construction $400 fee

Make check or money order payable to "Caroline County Health Department"

X Mary Reb — Date 8/22/00

N) Signature of legal owner or agent authorized in writing

HEALTH DEPARTMENT USE ONLY: RECEIPT# 23431 $ 400.00 DATE PD_____

Specs Sent 9-5-00

4236